1510-2E

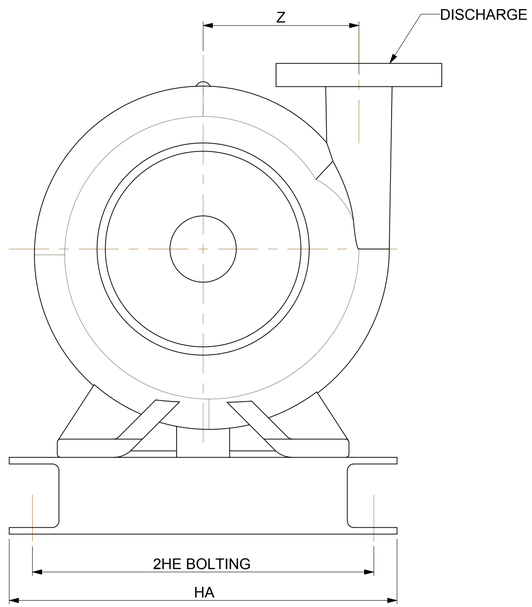

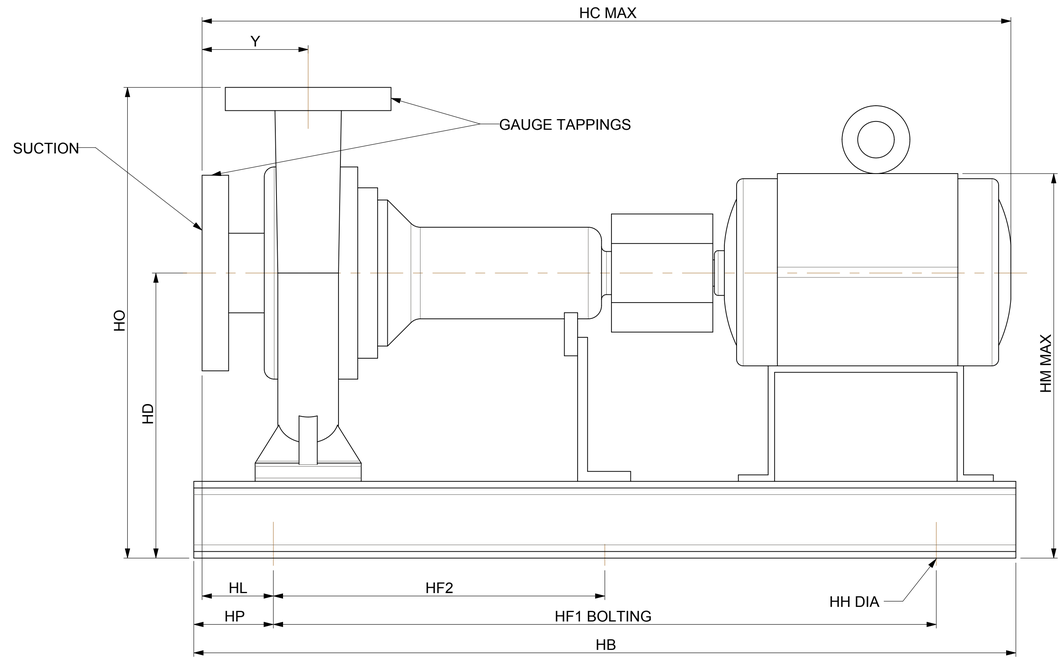

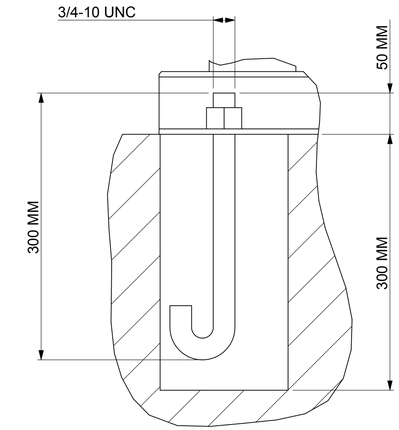

DETAIL A
SCALE 0.286

DIMENSIONS ARE SUBJECT TO CHANGE, NOT TO BE USED FOR CONSTRUCTION PURPOSES UNLESS CERTIFIED.

DIMENSIONS- Inches (mm)						STANDARD SEAL 1510, 1510-F												
MOTOR FRAME	MOTORKW	MOTOR RPM	HA	HB	HC MAX	HD	2HE	HF1	HF2	HH	HL	HM MAX	HO	HP	Y	Z	WEIGHT Kg. APPROX	OPERATING WEIGHT kg. APPROX
100L	2.2	1450	16 (406)	42-1/4 (1073)	34 (864)	14 (356)	14 (356)	32-1/4 (819)	16-1/8 (410)	7/8 (22)	6-1/2 (165)	19-1/4 (489)	22 (559)	5 (127)	5-1/2 (140)	6-1/2 (165)	196	245
112M	4	1450	16 (406)	42-1/4 (1073)	34-3/4 (883)	14 (356)	14 (356)	32-1/4 (819)	16-1/8 (410)	7/8 (22)	6-1/2 (165)	19-1/4 (489)	22 (559)	5 (127)	5-1/2 (140)	6-1/2 (165)	206	257
132S	5.5	1450	16 (406)	42-1/4 (1073)	37-1/4 (946)	14 (356)	14 (356)	32-1/4 (819)	16-1/8 (410)	7/8 (22)	6-1/2 (165)	19-7/8 (505)	22 (559)	5 (127)	5-1/2 (140)	6-1/2 (165)	227	284
160M	15	2900	16 (406)	42-1/4 (1073)	38-3/4 (984)	14 (356)	14 (356)	32-1/4 (819)	16-1/8 (410)	7/8 (22)	6-1/2 (165)	19-7/8 (505)	22 (559)	5 (127)	5-1/2 (140)	6-1/2 (165)	284	355
160L	18.5	2900	16 (406)	42-1/4 (1073)	42-1/2 (1080)	14 (356)	14 (356)	32-1/4 (819)	16-1/8 (410)	7/8 (22)	6-1/2 (165)	20-7/8 (530)	22 (559)	5 (127)	5-1/2 (140)	6-1/2 (165)	325	406
180M	22	2900	16 (406)	51-3/4 (1314)	49 (1245)	14 (356)	14 (356)	41-3/4 (1060)	20-7/8 (530)	7/8 (22)	4-1/8 (105)	22 (559)	22 (559)	5 (127)	5-1/2 (140)	6-1/2 (165)	391	489
200L	30, 37	2900	16 (406)	51-3/4 (1314)	50-7/8 (1292)	15 (381)	14 (356)	41-3/4 (1060)	20-7/8 (530)	7/8 (22)	4-1/8 (105)	23-1/8 (587)	23 (584)	5 (127)	5-1/2 (140)	6-1/2 (165)	490	612

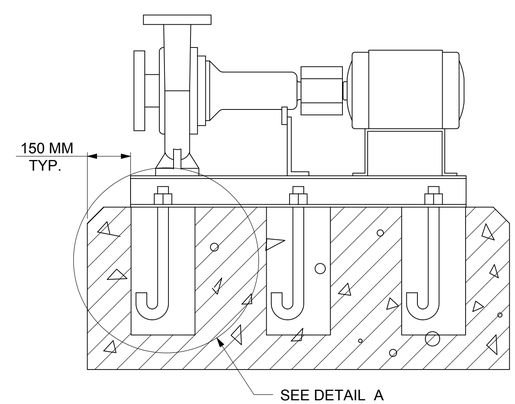

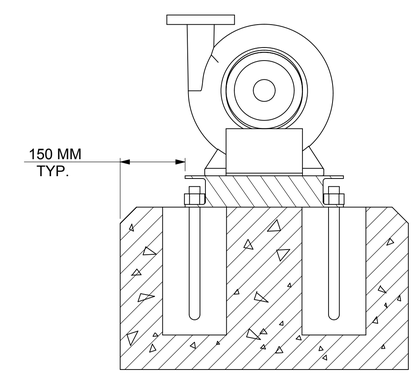

DEVIATION FOR LINEAR DIMENSIONS ARE AS PER IS:2102 VERY COARSE CLASS.

ABOVE	0.5	3	6	30	120	400	1000	2000
UP TO & INCLUDING	3	6	30	120	400	1000	2000	4000
VERY COARSE CLASS	—	± 0.5	± 1.0	± 1.5	± 2.5	± 4.0	± 6.0	± 8.0

MAXIMUM WORKING PRESSURE 175 PSI (12 BAR)
FLANGE ARE 125# ANSI - STANDARD

FLANGE DIMENSIONS IN INCHES (MM)						
	SIZE	O.D.	THICKNESS	PCD	HOLE DIA.	NO OF HOLES
DISCHARGE	2	6.25 (159)	0.88 (22)	4.75 (121)	0.75 (19)	4
SUCTION	3	8 (203)	1.13 (29)	6 (152)	0.75 (19)	4

MAXIMUM WORKING PRESSURE 232 PSI (16 BAR)

FLANGE DIMENSIONS IN INCHES (MM)						
	SIZE	O.D.	THICKNESS	PCD	HOLE DIA.	NO OF HOLES
DISCHARGE	2	6.25 (159)	0.88 (22)	4.92 (125)	0.71 (18)	4
SUCTION	3	8 (203)	1.12 (28)	6.3 (160)	0.71 (18)	8

NOTE :
1) THE FOUNDATION TO BE MADE OF CONCRETE ON SOLID GROUND.
2) FOUNDATION BOLTS & PACKER PLATES TO BE GROUTED WITH QUICK SETTING NON-SHRINK GROUT ONLY.
3) RECOMMENDED MAKE : ACC "SHRINKKOMP" / FORSORC "CONBEXTRA-GP2" OR EQUIVALENT BALANCE HOLLOW PORTION OF BASEFRAME TO BE GROUTED WITH PORTLAND CEMENT, SAND & AGGREGATE IN PROPORTION OF 1:2:2 GRAVEL SIZE SHOULD BE < 18 TO 20 MM. AFTER FINAL GROUTING ALL SURFACE SHOULD BE FINISHED WITH FINE PLASTER.
4) THE FOUNDATION MUST BE ATLEAST 2.5 TIMES THE WEIGHT OF THE PUMP UNIT.
5) FOUNDATION DETAILS ARE FOR REFERENCE ONLY, SHOULD BE CONSTRUCTED BY CUSTOMER AS PER SITE REQUIREMENT ONLY.
6) PUMP SET IMAGE IS PROVIDED FOR DIMENSIONS REFERANCE ONLY AND IS NOT TO SCALE.

REVISION		DATE	BY	CKD.	APP.	REVISION		DATE	BY	CKD.	APP.
					03	MAXIMUM WORKING PRESSURE DETAIL CHANGED		09/06/14	VP	DJ	KS
					02	FLANGE DETAIL ADDED		02/04/14	VP	DJ	KS
05	SUPPORT FOOT MOUNTING DIRECTION CHANGED	13/12/16	VP	KS	KS	01	FOUNDATION DETAILS ADDED	12/02/13	DJ	NP	KS
04	16 BAR & GENERAL TOLERANCE DETAILS ADDED	12/03/15	VP	DJ	KS	00	ORIGINAL RELEASE	16/08/12	NP	DJ	KS

TITLE: 1510 2E MODEL
MAT'L:

DWN.	DATE.	CKD.	DATE.	SCALE
NP	16/08/12	DJ	16/08/12	NTS

TOLERANCES UNLESS OTHERWISE SPECIFIED:
X.X± X.XX± X.XXX± X.XXXX± ANGLE ± FRAC.±

DWG NO. 1510-2E

THIRD ANGLE PROJECTION

"THIS DRAWING AND THE INFORMATION DEPICTED THEREIN IS THE PROPERTY OF XYLEM. COPIES ARE ISSUED IN STRICT CONFIDENCE AND SHALL NOT BE REPRODUCED OR COPIED, OR USED AS THE BASIS FOR THE MANUFACTURE OR SALE OF PRODUCTS WITHOUT PRIOR WRITTEN PERMISSION OF XYLEM".

xylem
Xylem Water Solutions India Private Limited
Plot No. 731, GIDC Savli, Manjusar, Savli Road,
Vadodara-391 770, Gujarat, India.
Tel : +91 2667 265800.